Module	m	8
Number of teeth	z	107
Addendum modification	x	0
Pressure angle	a	20°
Accuracy grade	10-ISO 1328/97	

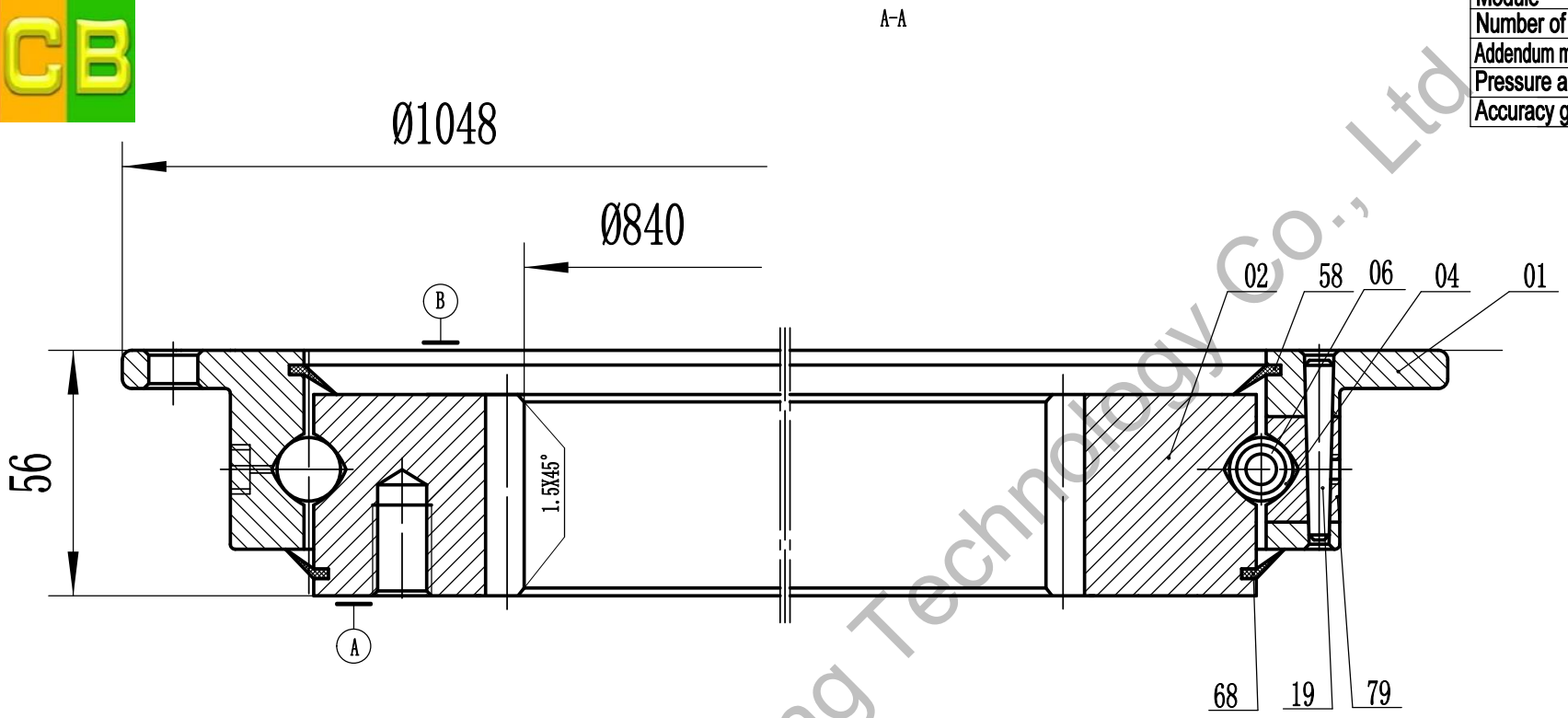

Remark:

1. Luoyang JCB Bearing Technology Co., Ltd is a technical Inc, specialize in designing and manufacturing slewing ring bearing, we can design and manufactur all kinds of slewing bearing according to client's requirement.
2. This drawing is reference for user, if you need formal drawing, please contact wth us sales@jcb-bearing.com, the official drawing will be submitted after order confirmation.

Contact information
Company Address : No.3 Lianmeng road, Luoyang, Henan, China.
Postal code : 471003
Phone : 86-379-68611678 Fax : 86-379-68611679
E-mail: sales@jcb-bearing.com
Reserved E-mail: sales@slewing-ring-bearings.com
Website: www.jcb-bearing.com
www.slewing-ring-bearings.com

Standard series 920	92-20 0941/1-07262	
		Weight(kg)
		69
	Luoyang JCB Bearing Technology Co., Ltd	

Luoyang JCB Bearing Technology Co., Ltd